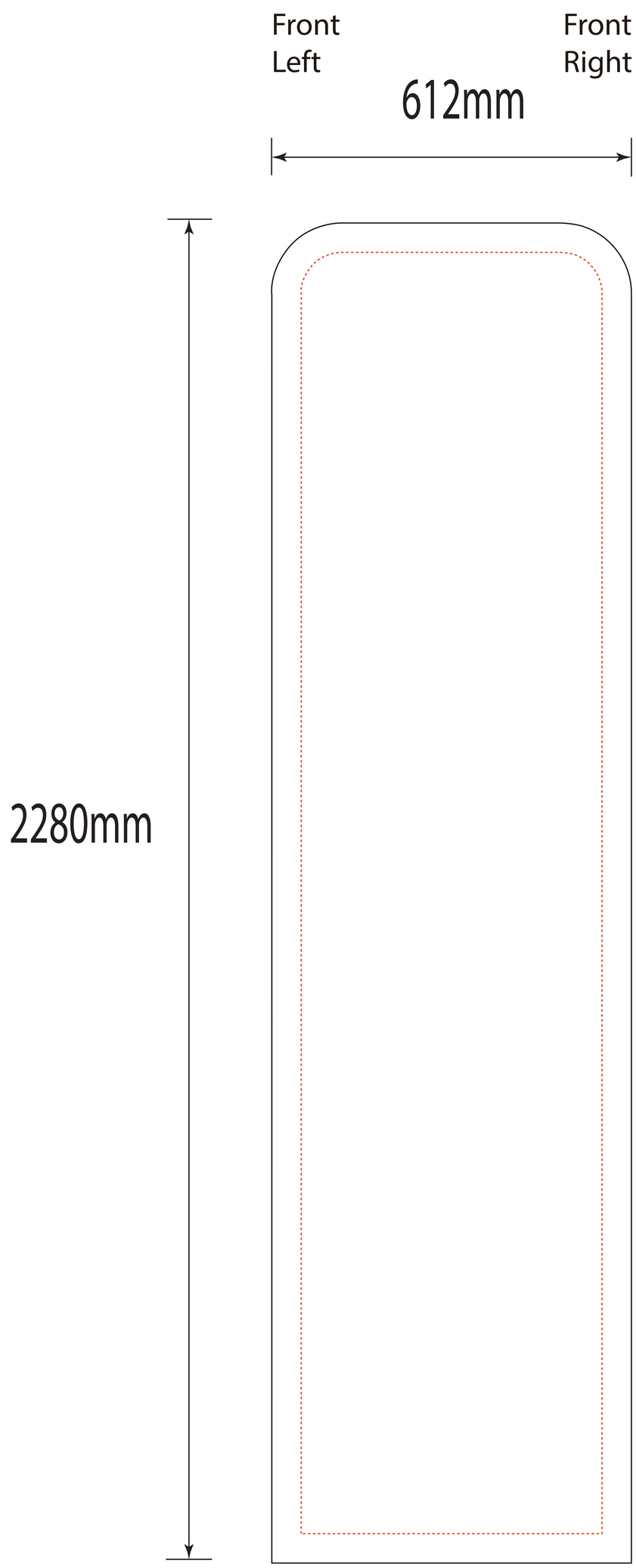
Front
Left
Front
Right
612mm
2280mm

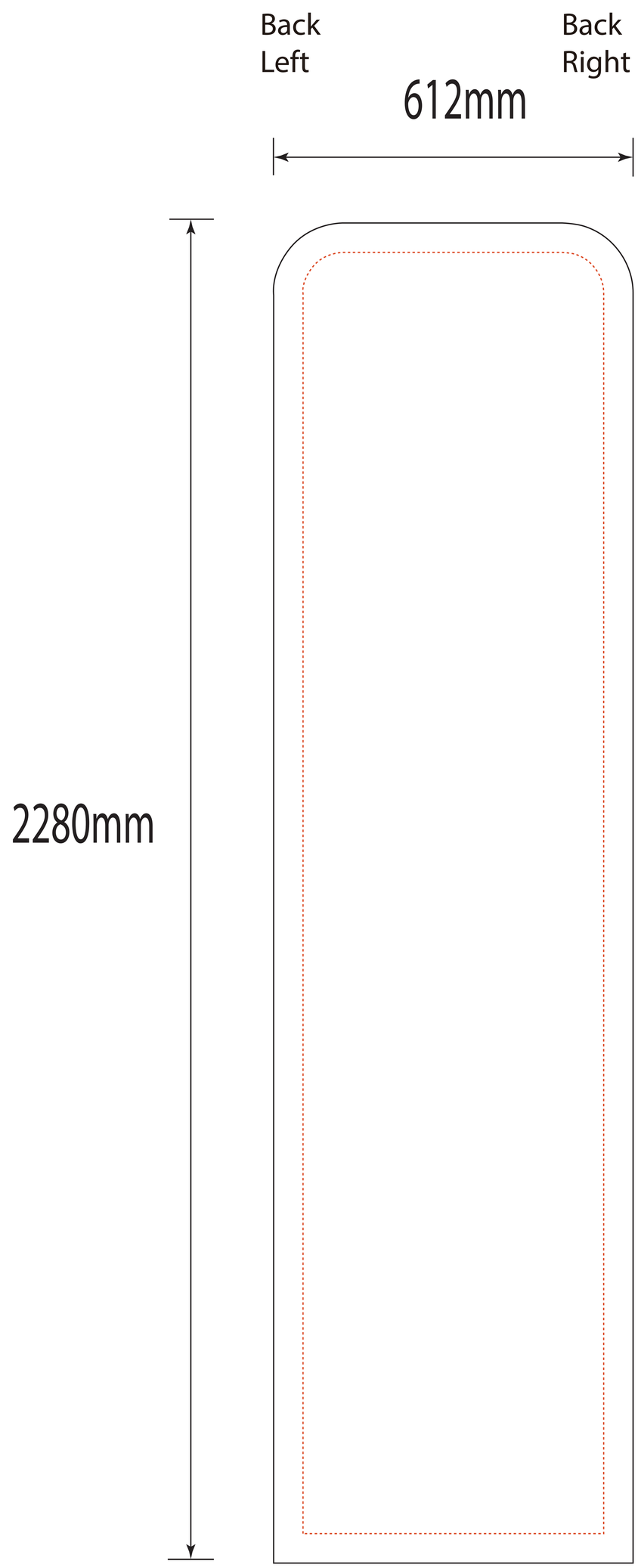
Back
Left
Back
Right
612mm
2280mm