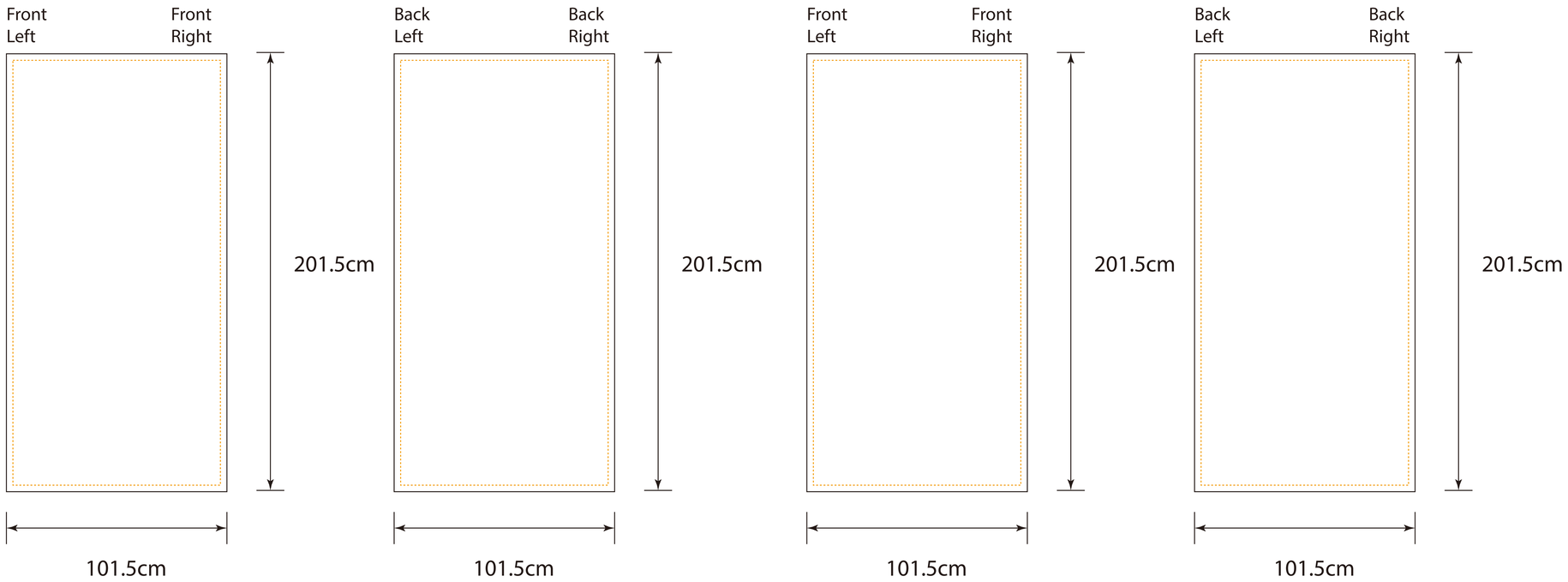
Front Left
Front Right
201.5cm
101.5cm
Back Left
Back Right
201.5cm
101.5cm
Front Left
Front Right
201.5cm
101.5cm
Back Left
Back Right
201.5cm
101.5cm

Business Conference Women Week
Business Conference Women Week
Business Conference Women Week

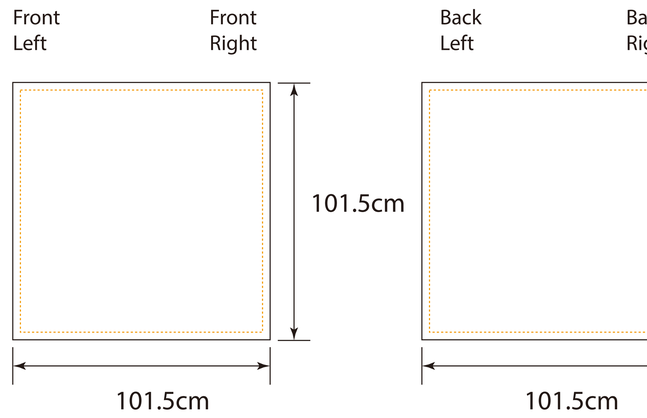
Front Left
Front Right
101.5cm
101.5cm
Back Left
101.5cm

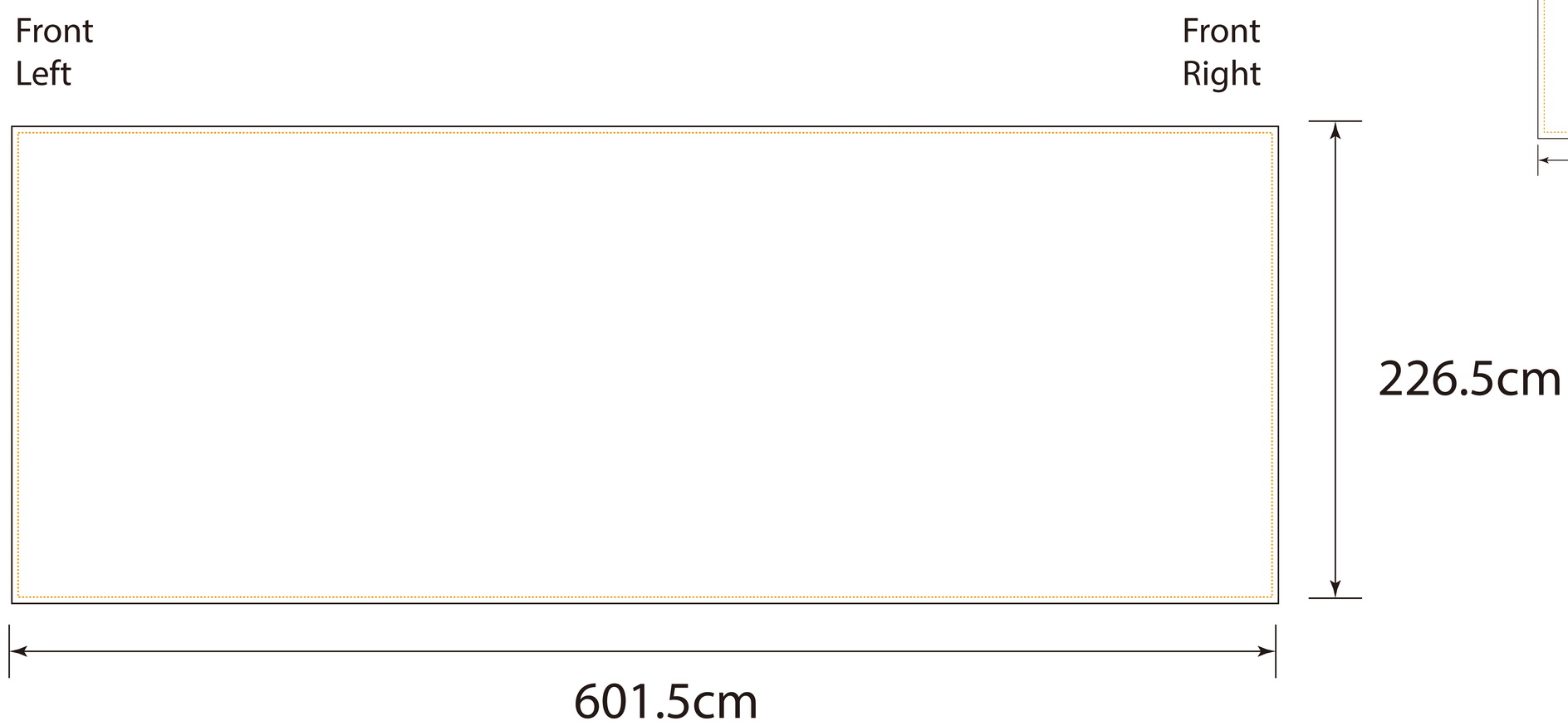
Front Left
Front Right
226.5cm
601.5cm

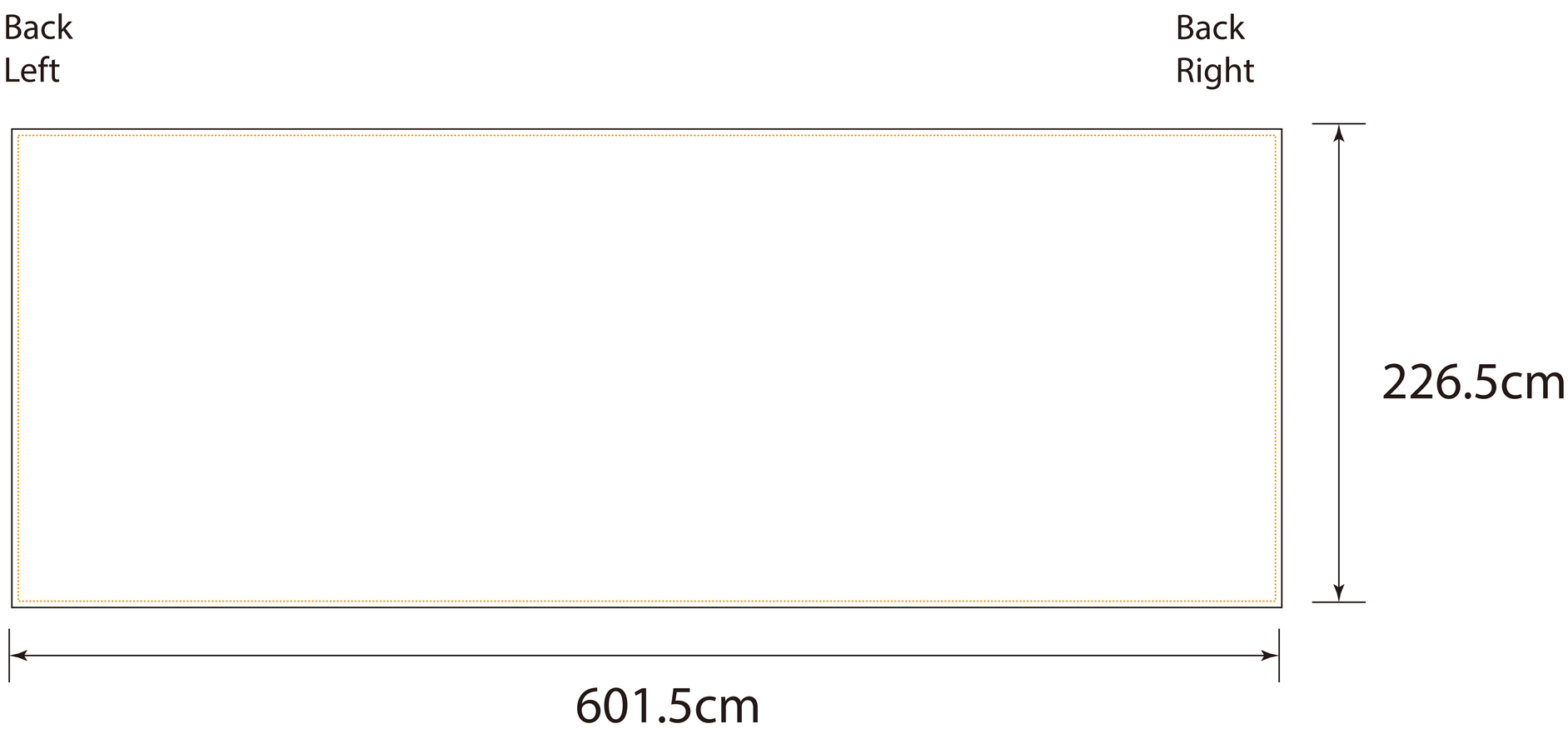
Back Left
Back Right
226.5cm
601.5cm